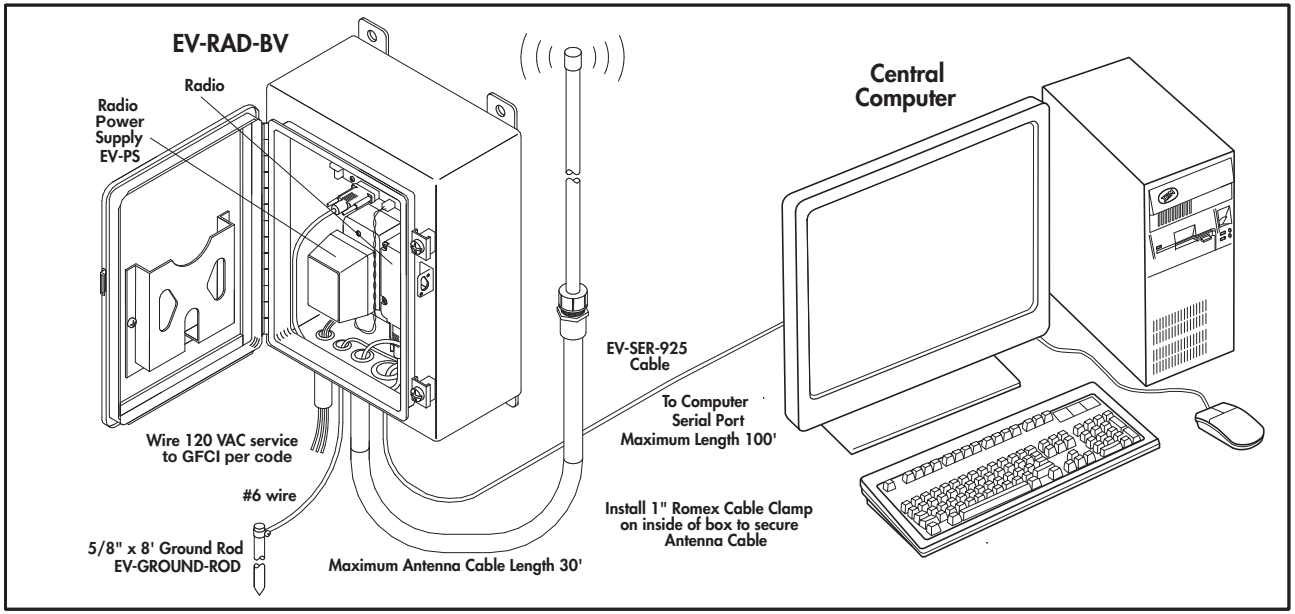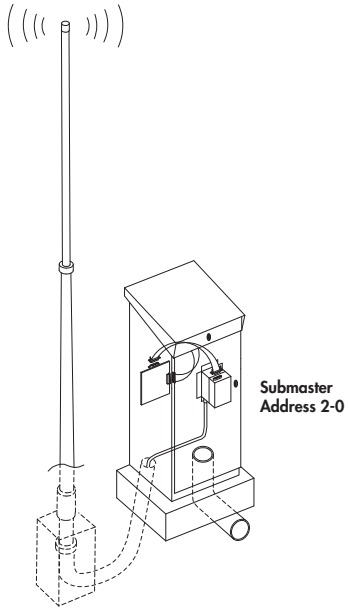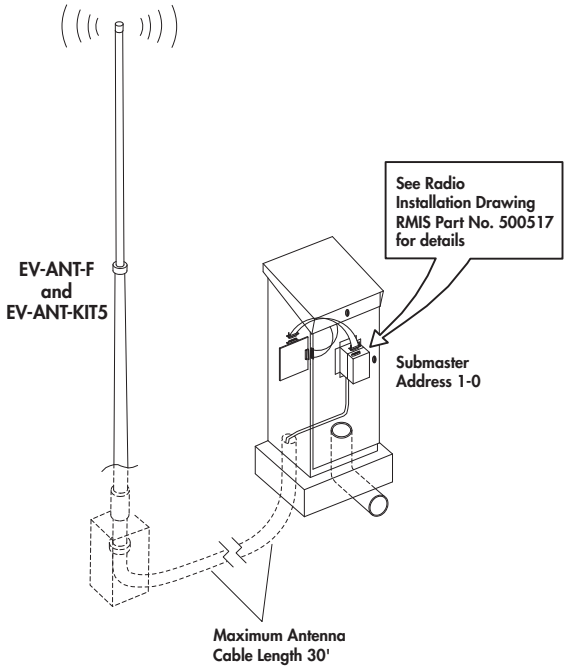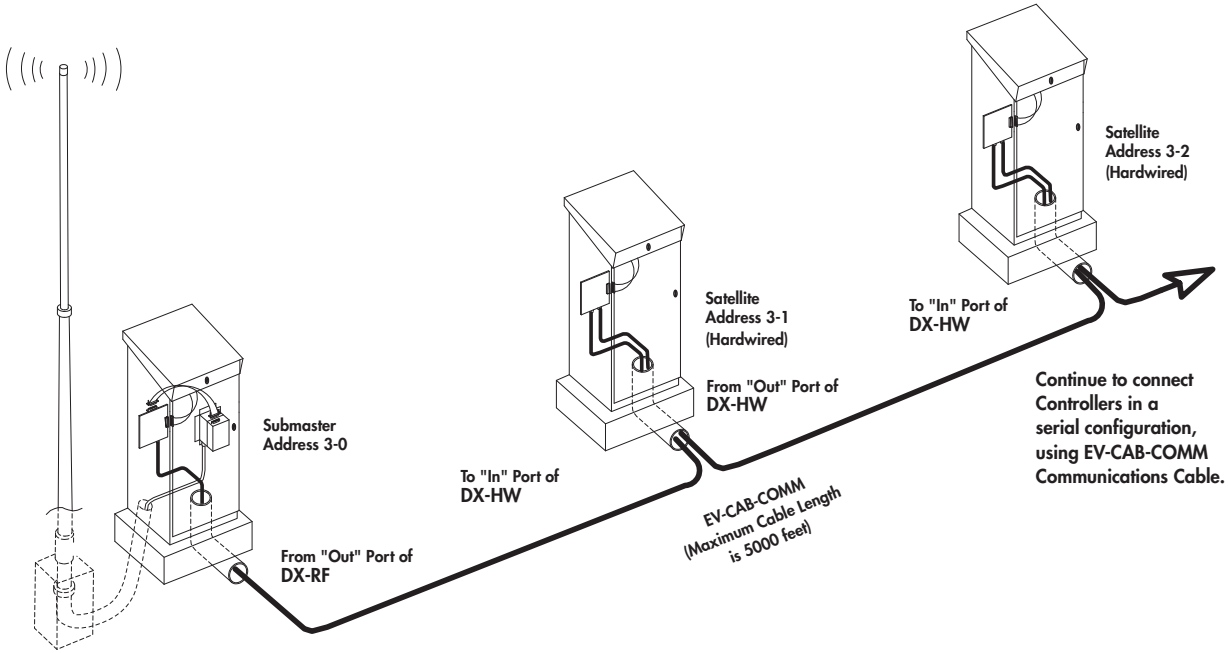RAIN MASTER® EVOLUTION DX2 • RADIO COMMUNICATIONS OVERVIEW